SINGER®

C5950-C5955
C5980-C5985

Liste de pièces
Lista de Piezas
Parts List

® A registered trademark of The Singer Company Ltd. or its affiliates.
® Una marca registrada de The Singer Company Ltd. o sus afiliados.
® Une marca déposée de The Singer Company Ltd. ou ses filiales.

104 25 52-96
05 Jun 2023

A

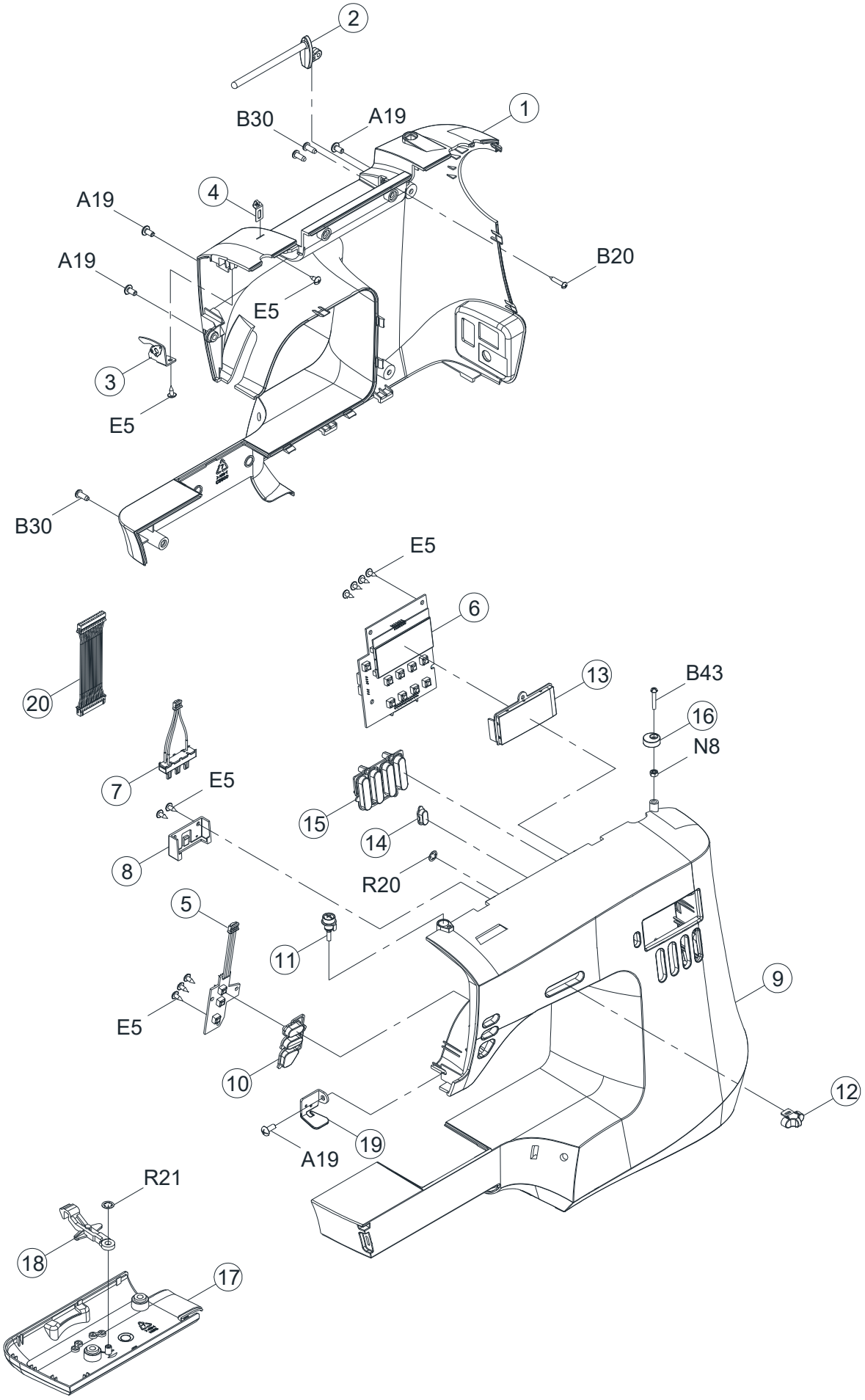
2
1
B30
A19
4
A19
A19
B20
E5
3
E5
B30
E5
6
20
13
B43
16
N8
7
E5
15
14
8
R20
5
11
9
E5
10
12
19
A19
R21
18
17

A

Ref No	Part No	Part Name	
1	68024748	BACK COVER	
2	416804601	SPOOL PIN BASE	
3	68016955	THREAD GUIDE CPL.	
4	416804501	THREAD GUIDE	
5	68003843	KEY PLATE	
6	68003825	LCD MAIN CIRCUIT BOARD	
7	68003819	SLIDE VOLUME	
8	68024751	SPEED ADJUSTABLE VARIABLE RESISTANCE FIXING SEAT	
9	68024754	FRONT COVER	FOR C5985
9	68024755	FRONT COVER	FOR C5980
9	68024758	FRONT COVER	FOR C5955
9	68024765	FRONT COVER	FOR C5950
10	68024770	START/STOP BUTTON	
11	68015139	BOBBIN WINDER THREAD GUIDE CPL.	
12	68016954	SPEED ADJUSTMENT KNOB	
13	68021915	LCD COVER	
14	68021947	STITCH ADJUSTMENT/MODE BUTTON	
15	68021974	FUNCTION BUTTON	
16	416554101	BOBBIN WINDER STOPPER	
17	68024772	FREE ARM BASE COVER	
18	68024774	DROP FEED LEVER	
19	68016951	ARM THREAD GUIDE PLATE	
20	68015142	ROW LINE	
A19	416121501	PAN HEAD SCREW (L)	
B20	416120301	PAN HEAD SCREW (S)	
B30	416122201	PAN HEAD SCREW (S)	
B43	416174001	PAN HEAD SCREW (S)	
E5	416681501	TRUSS HEAD SCREW	
N8	416126301	NUT	
R20	416225801	RING	
R21	416116801	RING	

B

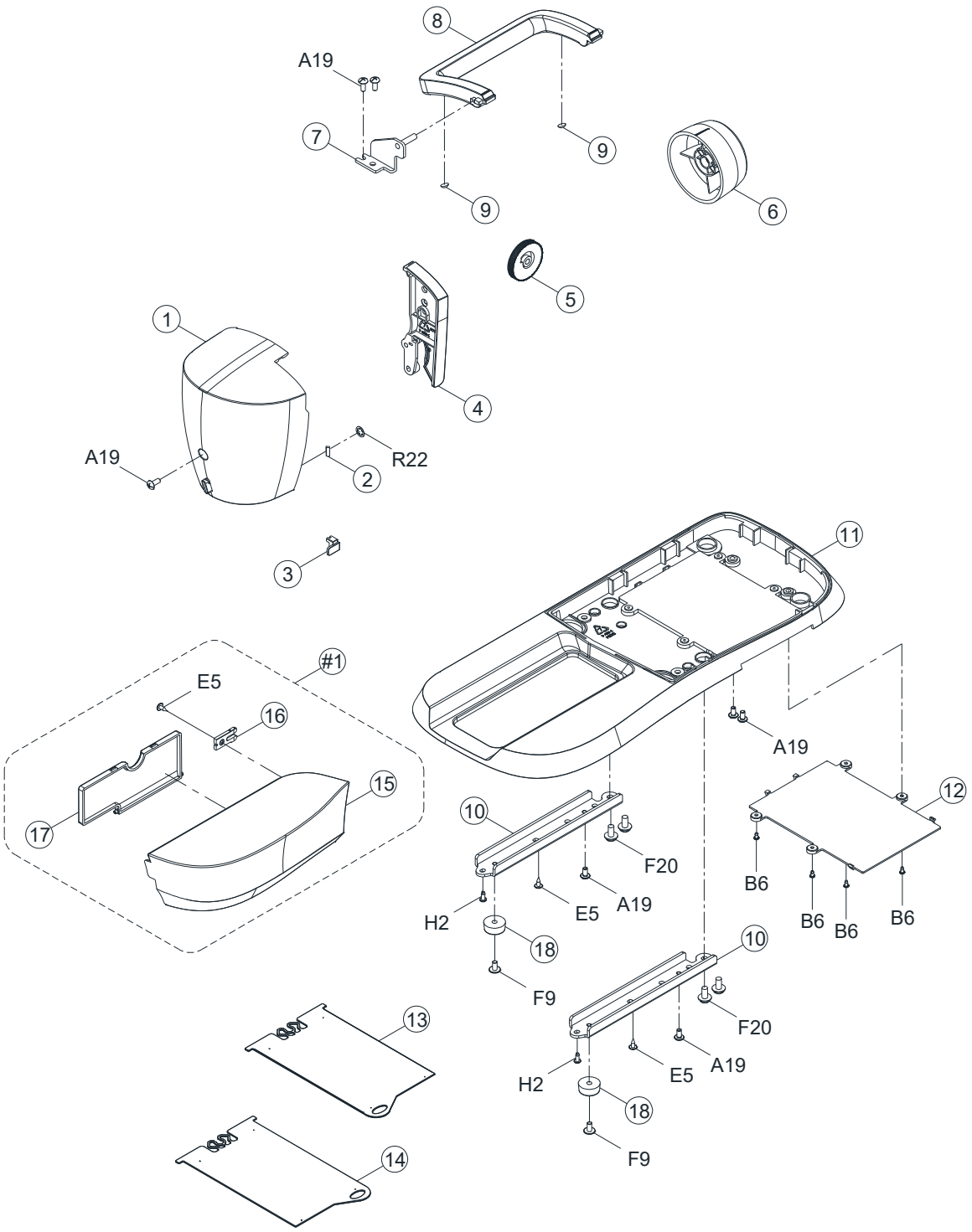
8
A19
7
9
9
6
5
1
4
A19
R22
2
3
11
#1
E5
16
15
17
A19
12
10
F20
B6
H2
E5
A19
B6
B6
B6
18
F9
10
F20
13
H2
E5
A19
18
F9
14

B

Ref No	Part No	Part Name
#1	68024786	SEWING TABLE CPL.
1	68021981	FACE COVER
2	412423701	CUTTER BLADE
3	68015178	BH LEVER BUTTON
4	68016988	TENSION SUPPORTER COVER
5	68010960	THREAD TENSION DIAL
6	68024781	HAND WHEEL
7	270 V62033006	HANDLE BRACKET CPL.
8	68016991	HANDLE
9	68015189	SPACER
10	270 H1A0413006	FREE ARM FOOT
11	68024785	BASE
12	68021985	PATTERN PLATE COVER
13	68021999	PATTERN PLATE (1)
14	68022001	PATTERN PLATE (2)
15		
16		
17		
18	68012007	RUBBER CUSHION
A19	416121501	PAN HEAD SCREW (L)
B6	416632701	PAN HEAD SCREW (S)
E5	416681501	TRUSS HEAD SCREW
F9	416679501	WASHER HEAD SCREW
F20	416679301	WASHER HEAD SCREW
H2	416184801	SCREW
R22	416116701	RING

C

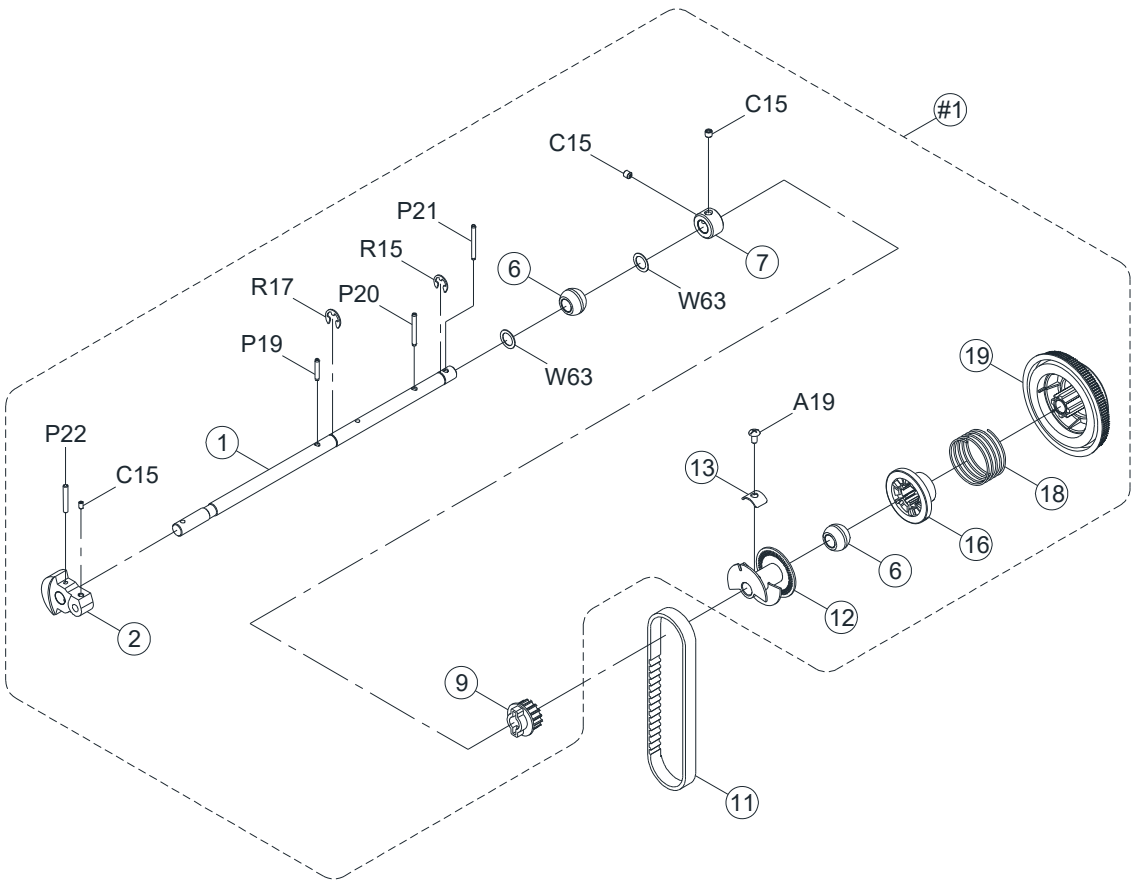
#1
C15
C15
P21
R15
R17
P20
P19
6
7
W63
W63
19
A19
P22
1
C15
13
18
16
6
12
2
9
11

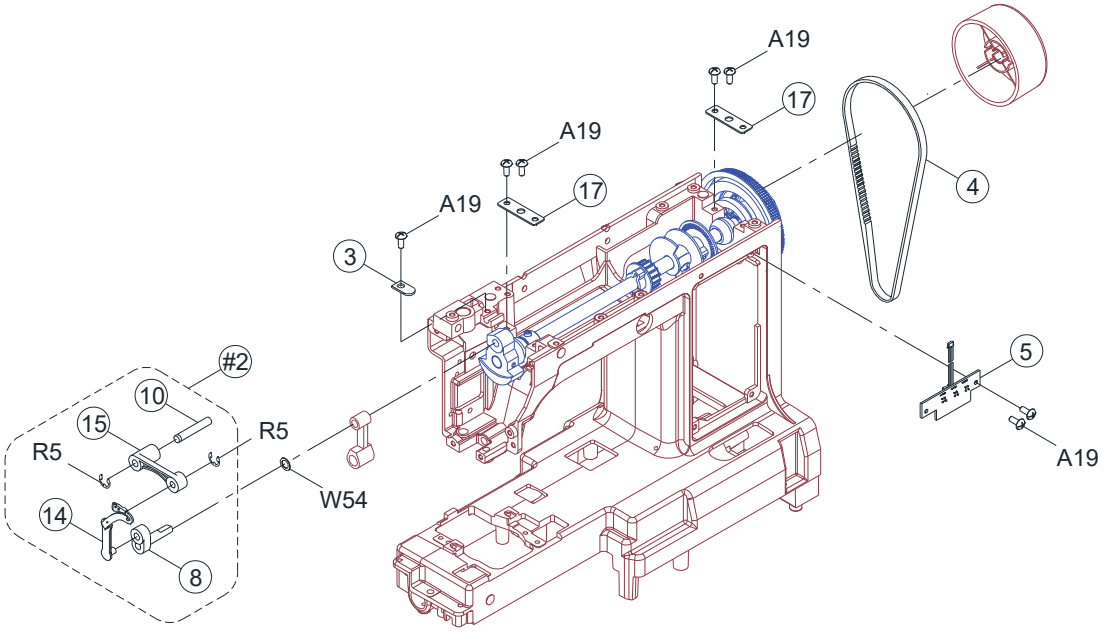
A19
17
A19
17
A19
3
4
#2
10
15
R5
R5
5
A19
W54
14
8

C

Ref No	Part No	Part Name
#1	68018716	UPPER SHAFT CPL.
#2	416484501	THREAD TAKE-UP LEVER CPL.
1		
2		
3	416152201	GASKET
4	416685701	BELT
5	68003049	PHOTO SENSOR CPL.
6		
7		
8		
9		
10		
11	416680301	BELT
12		
13		
14		
15		
16		
17	416161701	BUSHING PRESSER
18		
19		
A19	416121501	PAN HEAD SCREW (L)
W54	416524701	WASHER

D

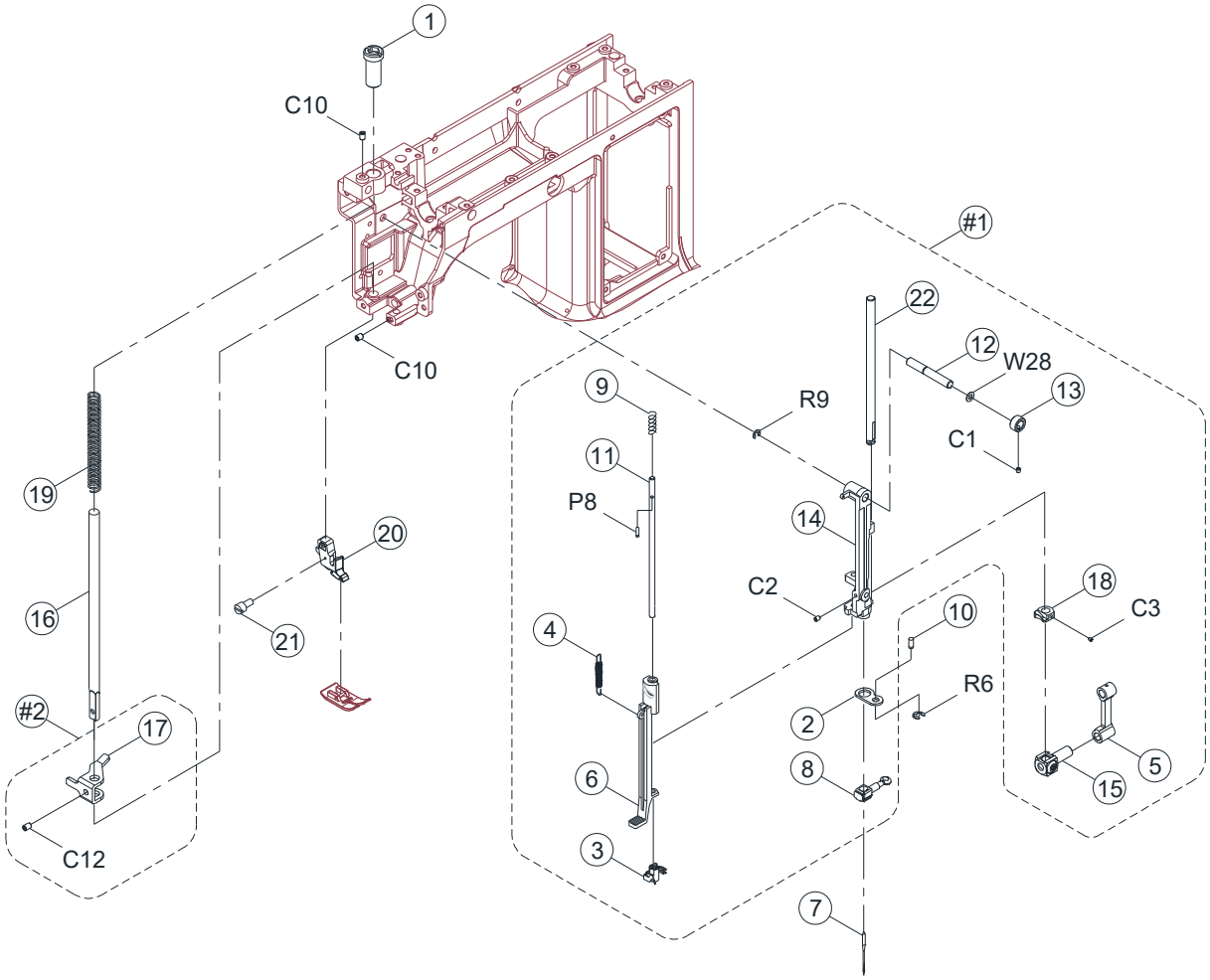
1
C10
C10
#1
22
12
W28
13
C1
R9
9
11
P8
14
C2
18
C3
10
R6
2
8
5
15
4
6
3
7
19
16
20
21
#2
17
C12

D

Ref No	Part No	Part Name
#1	68024788	NEEDLE BAR SUPPORTER CPL.
#2	68015235	PRESSER BAR BRACKET CPL.
1	68013226	PRESSER BAR REGULATING SCREW CPL.
2		
3	68024675	AUTO THREADER
4		
5		
6		
7	250052602	NEEDLE
8	68024676	NEEDLE CLAMP CPL.
9		
10	68014111	NEEDLE BAR SUPPORTER PLATE PIN
11		
12		
13		
14		
15		
16	416173401	PRESSER BAR
17		
18		
19	68009173	PRESSER BAR SPRING
20	68017005	SHANK CPL.
21	416118401	SET SCREW (9/64x40x7)
22		
C10	416121001	SET SCREW
R6	416116101	RING

E

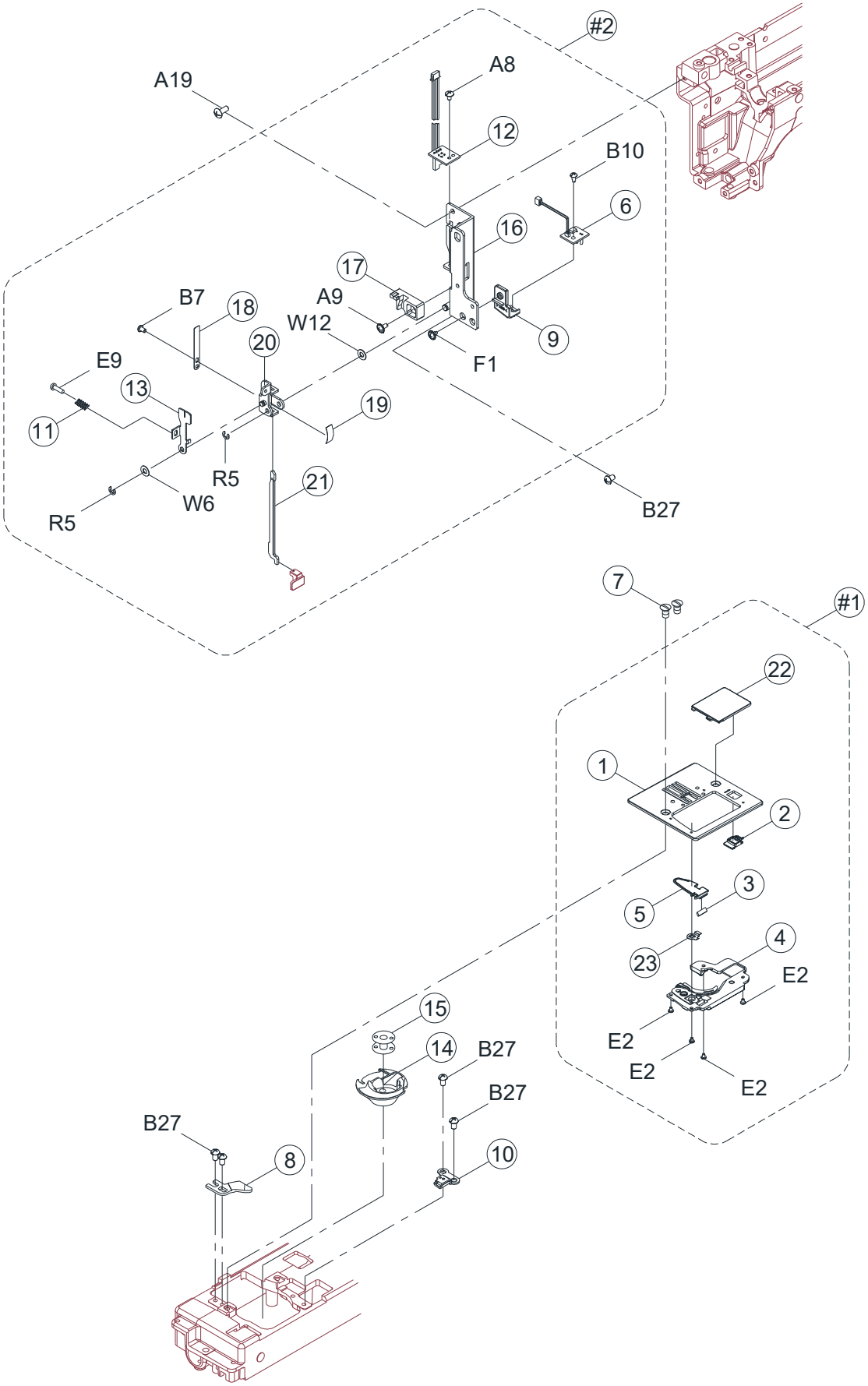
#2
A19
A8
12
B10
6
16
17
A9
W12
B7
18
20
9
F1
E9
13
19
11
R5
21
W6
R5
B27
7
#1
22
1
2
3
5
4
23
E2
E2
E2
E2
15
14
B27
B27
B27
8
10

Ref No	Part No	Part Name
#1	68024790	NEEDLE PLATE CPL.
#2	68015290	BH LEVER PLATE CPL.
1		
2		
3		
4		
5		
6		
7	416122901	SCREW
8	416144001	ROTARY HOOK PLATE
9		
10	416143901	ROTARY HOOK PLATE (2) CPL.
11		
12		
13		
14	416827001	INNER SHUTTLE HOOK CPL.
15	68000175	BOBBIN
16		
17		
18		
19		
20		
21		
22	68016949	NEEDLE PLATE COVER
23	68003570	PRESS PLATE
A19	416121501	PAN HEAD SCREW (L)
B27	416121201	PAN HEAD SCREW (S)

F

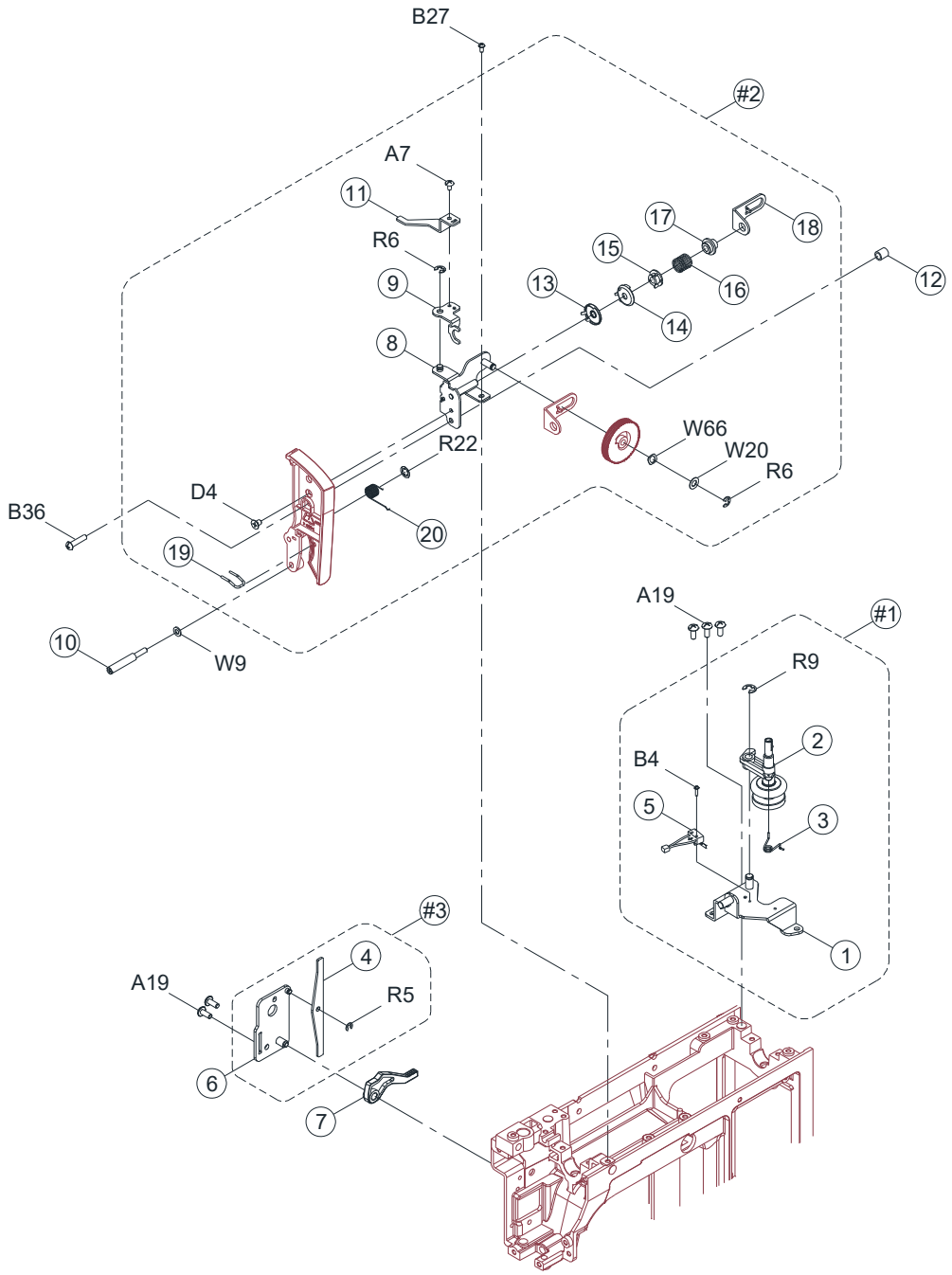
B27
#2
A7
11
R6
9
8
17
18
15
16
13
14
12
W66
W20
R6
R22
D4
B36
20
19
10
W9
A19
#1
R9
2
B4
5
3
1
#3
4
A19
R5
6
7

F

Ref No	Part No	Part Name
#1	68024792	BOBBIN WINDER CPL.
#2	68017007	TENSION REGULATOR CPL.
#3	68015299	CLAMP SETTER CPL.
1		
2	416700601	BOBBIN WINDER SHAFT & CRANK CPL.
3	68024791	BOBBIN WINDER CRANK SPRING
4		
5		
6		
7	68003659	PRESSER BAR LIFTER LEVER
8		
9		
10	416123001	SCREW
11		
12	416151701	DIAL TENSION GUIDE SPRING TUBE
13		
14		
15		
16		
17		
18		
19		
20		
A19	416121501	PAN HEAD SCREW (L)
B27	416121201	PAN HEAD SCREW (S)
B36	416121701	PAN HEAD SCREW (S)
W9	416186401	WASHER

G

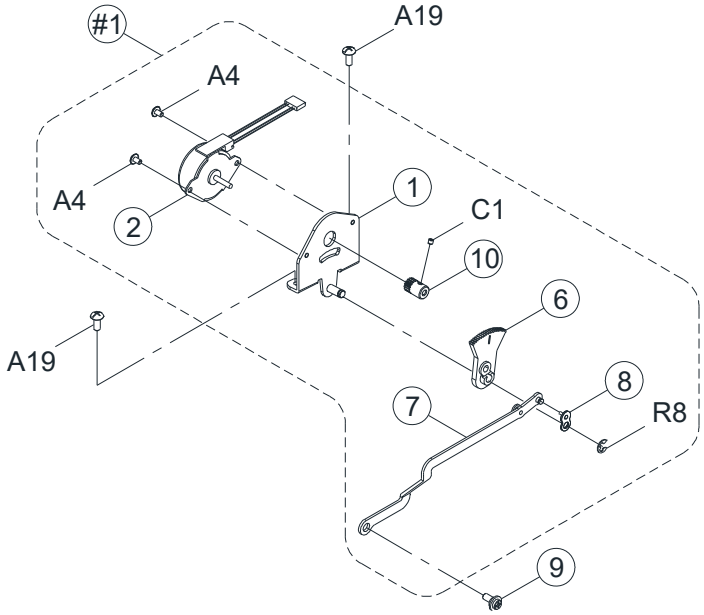

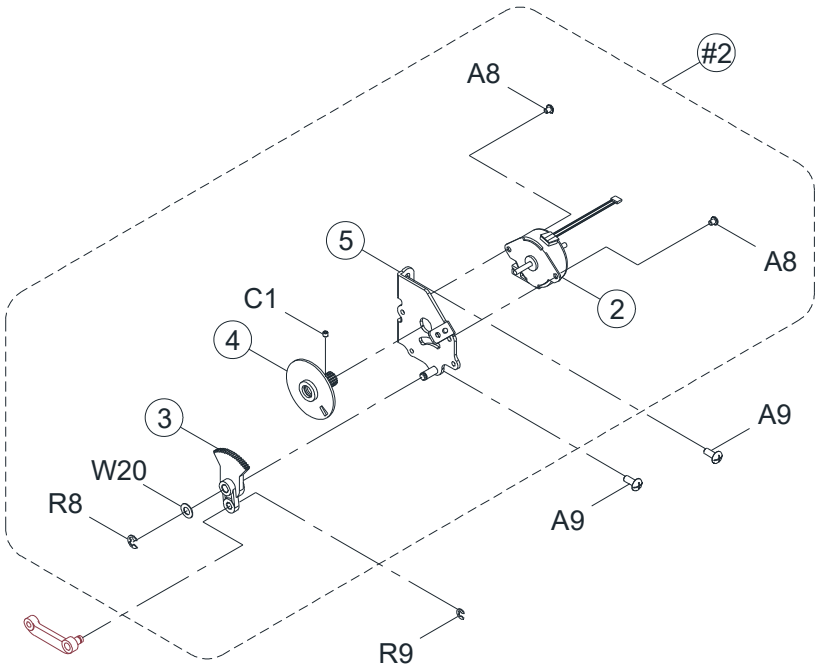

G

Ref No	Part No	Part Name
#1	68015306	ZIGZAG STEPPER MOTOR BRACKET CPL.
#2	68024794	FEED STEPPER MOTOR BRACKET CPL.
1		
2		
3		
4		
5		
6		
7		
8		
9	416801101	NEEDLE BAR DRIVING ROD PIN
10		
A9	416119201	PAN HEAD SCREW (L)
A19	416121501	PAN HEAD SCREW (L)
R9	416116301	RING

H

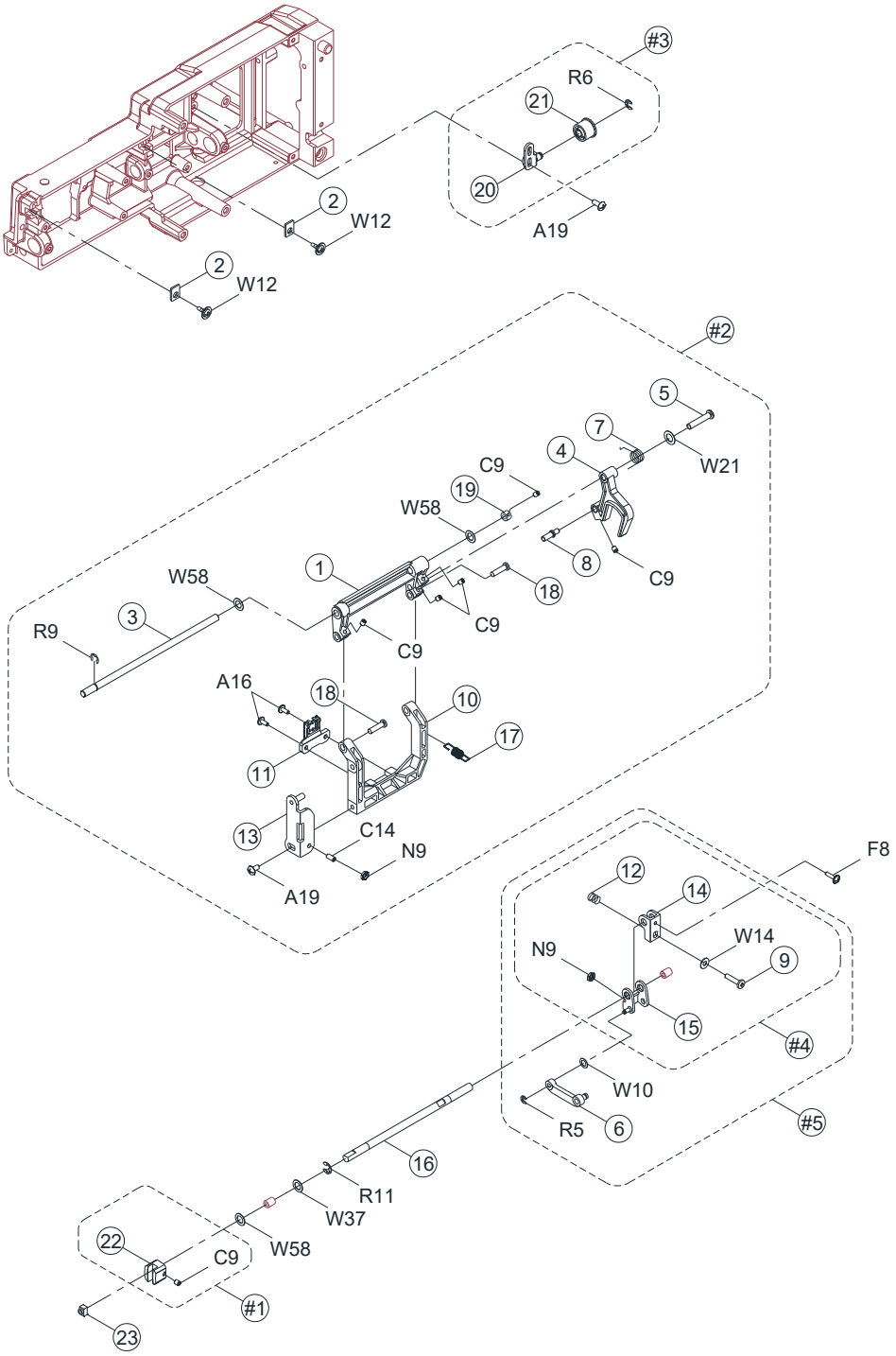
#3
R6
21
20
A19
2
W12
2
W12
#2
5
7
4
W21
C9
19
W58
8
C9
W58
1
18
3
R9
C9
C9
A16
18
10
17
11
13
C14
N9
A19
F8
12
14
W14
N9
9
15
#4
W10
R5
6
#5
16
R11
W37
22
C9
W58
#1
23

Ref No	Part No	Part Name
#1	416136201	FEED REGULATING CPL.
#2	68024795	FEED ROCK SHAFT CPL.
#3	416633601	BELT REGULATING PLATE CPL.
#4	68015317	FEED REGULATING CRANK CPL.
#5	68015316	FEED REGULATING CRANK CPL.
1		
2	68001430	GASKET
3		
4		
5		
6		
7		
8		
9		
10		
11	68003195	FEED DOG
12		
13		
14		
15		
16	270 H1A0203000	FEED REGULATING SHAFT
17		
18		
19		
20		
21		
22		
23	416356601	FEED REGULATING BLOCK
A19	416121501	PAN HEAD SCREW (L)
F8	416595701	WASHER HEAD SCREW
R11	416116301	RING
W12	416185901	WASHER
W37	416124001	WASHER
W58	416125601	WASHER

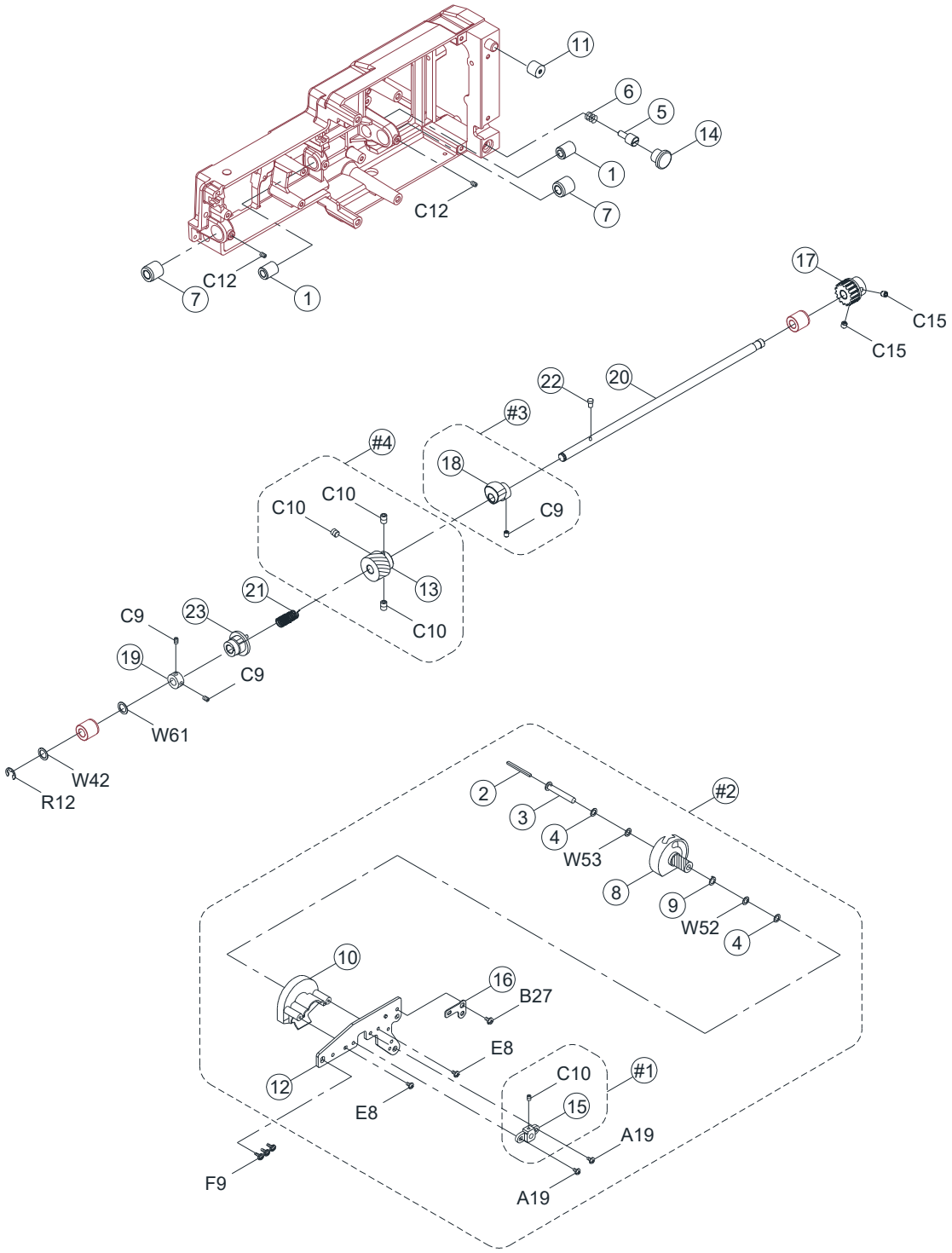
11
6
5
14
1
7
C12
C12
7
1
17
C15
C15
22
20
#3
#4
18
C10
C10
C9
13
21
C9
23
C10
19
C9
W61
W42
R12
2
#2
3
4
W53
8
9
W52
4
10
16
B27
E8
12
C10
#1
E8
15
A19
F9
A19

Ref No	Part No	Part Name
#1	68015319	ROTARY HOOK SUPPORTER CPL.
#2	68024796	ROTARY HOOK HOLDER CPL.
#3	68015320	FEED ROCK CAM CPL.
#4	416197101	LOWER SHAFT GEAR CPL.
1	416156901	FEED ROCK BUSHING
2		
3		
4		
5	416154601	ADJUSTMENT SCREW
6	416147301	BASE PLATE ADJUSTMENT SCREW SPRING
7	416141701	LOWER SHAFT BUSHING
8	68003558	SHUTTLE HOOK HOLDER
9		
10		
11	68003263	FREE ARM BASE CUSHION RUBBER
12		
13		
14	416526001	FREE ARM BASE CUSHION RUBBER
15		
16		
17	270 H1A0463000	LOWER SHAFT BELT PULLEY
18		
19	416158801	LOWER SHAFT COLLAR
20	270 H1A0133000	LOWER SHAFT
21	416191401	LOWER SHAFT SPRING
22	416191301	FEED LIFTING ROCK COM PIN
23	416191201	FEED LIFTING ROCK CAM
C9	416122401	SET SCREW
C12	416122101	SET SCREW
C15	270 004250203	SET SCREW
F9	416679501	WASHER HEAD SCREW
R12	416116401	RING
W42	416186501	WASHER
W61	416125801	WASHER

J

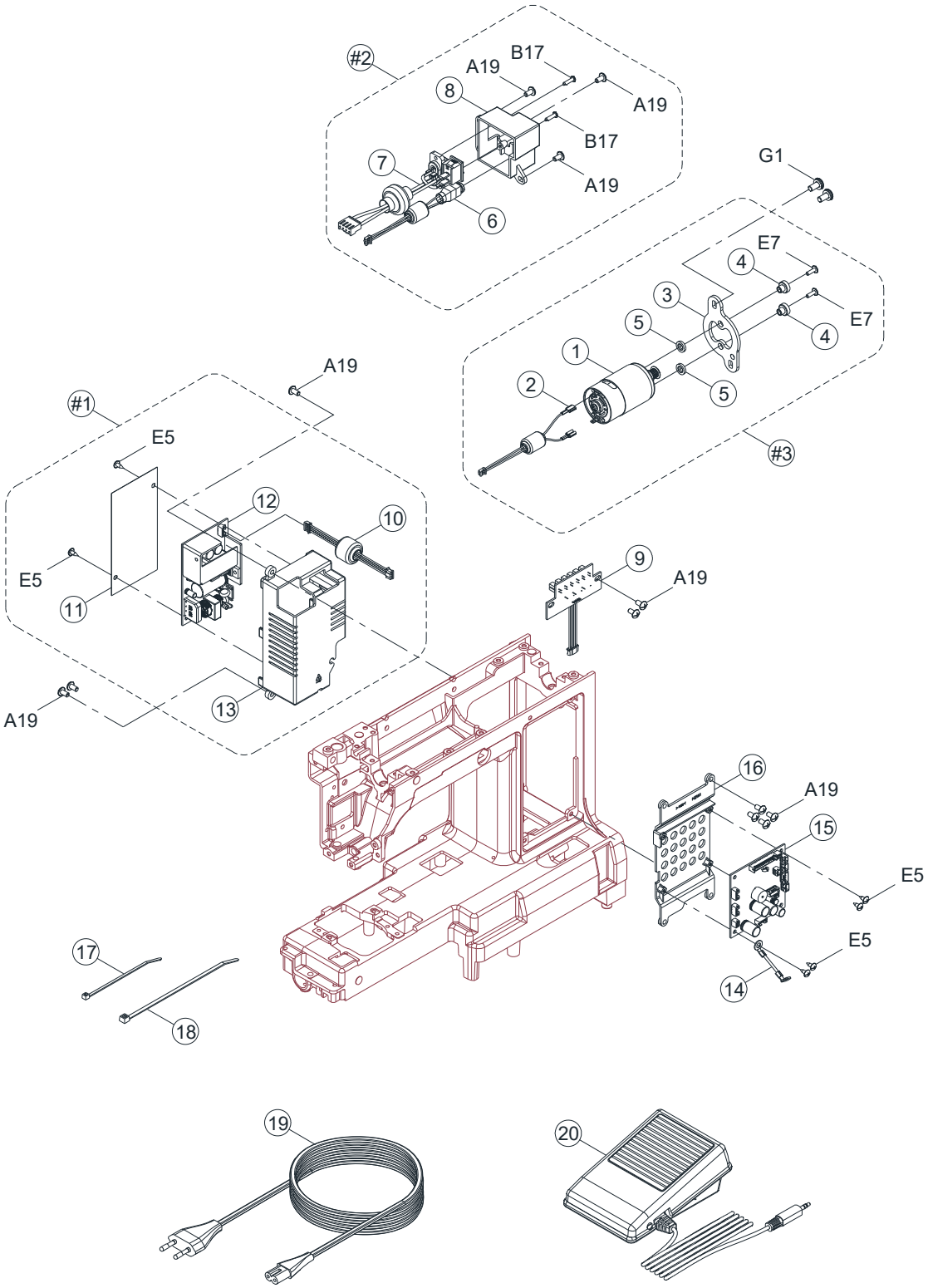
#2
A19
B17
8
A19
B17
7
A19
6
G1
E7
4
3
E7
5
4
1
5
2
#3
A19
#1
E5
12
10
E5
11
9
A19
A19
13
16
A19
15
E5
E5
17
14
18
19
20

Ref No	Part No	Part Name
#1	68018729	HF TRANSFORMER BOX CPL. FOR 120V
#1	68018730	HF TRANSFORMER BOX CPL. FOR 230V
#2	68017016	RECEPTACLE HOLDER CPL. FOR 120V
#2	68017015	RECEPTACLE HOLDER CPL. FOR 230V
#3	68003052	DC MOTOR CPL.
1		
2		
3		
4		
5		
6		
7		
8		
9	68003049	PHOTO SENSOR CPL.
10		
11		
12		
13		
14	416687301	GROUND CONNECTION
15	68024798	MAIN CIRCUIT BOARD
16	68015323	FRAME OF MAIN CIRCUIT BOARD
17	416113901	CORD CLIP
18	416115501	CORD CLIP
19	412157903	SUPPLY CORD FOR 120V
19	412157801	SUPPLY CORD FOR 230V
20	68011738	FOOT CONTROLLER & BAG CPL.
A19	416121501	PAN HEAD SCREW (L)
E5	416681501	TRUSS HEAD SCREW
G1	68013176	SEMS SCREW

K

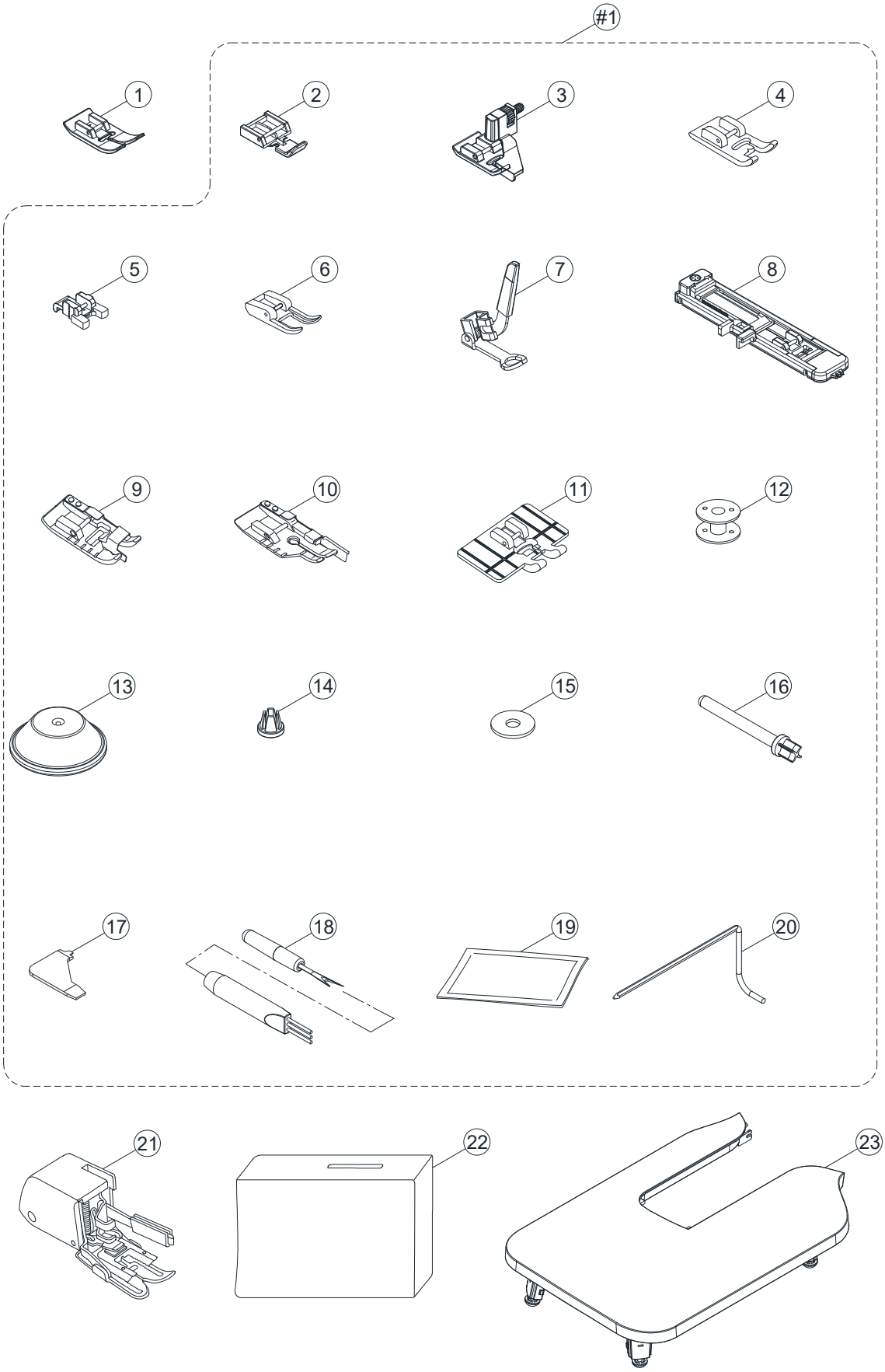

FOR C5980,C5985

Ref No	Part No	Part Name
#1	68024803	ACCESSORY CPL.
1	68017019	ALL PURPOSE FOOT
2	416128701	ZIPPER FOOT
3	416437101	BLIND HEMMING FOOT
4	416437201	FANCY STITCHES FOOT
5	416284501	BUTTON SEWING FOOT
6	416494101	OPEN TOE APPLIQUE FOOT
7	416127401	EMBROIDERY FOOT
8	68017017	BUTTONHOLE FOOT CPL.
9	68025393	EDGE JOINING FOOT
10	68025414	1/4” INCH QUILTING FOOT
11	68025416	PARALLEL SEWING FOOT
12	68000175	BOBBIN
13	68003700	SPOOL HOLDER (LARGE)
14	68003701	SPOOL HOLDER (SMALL)
15	416127301	SPOOL PIN FELT
16	68003702	SPOOL PIN
17	68000177	L-SCREWDRIVER
18	416127701	BRUSH & SEAM RIPPER CPL.
19	250052602	NEEDLE
20	68017018	SEAM GUIDE / QUILTING BAR
21	416284301	WALKING FOOT
22	68017069	SOFT COVER
23	68024801	EXTENSION TABLE CPL.

L

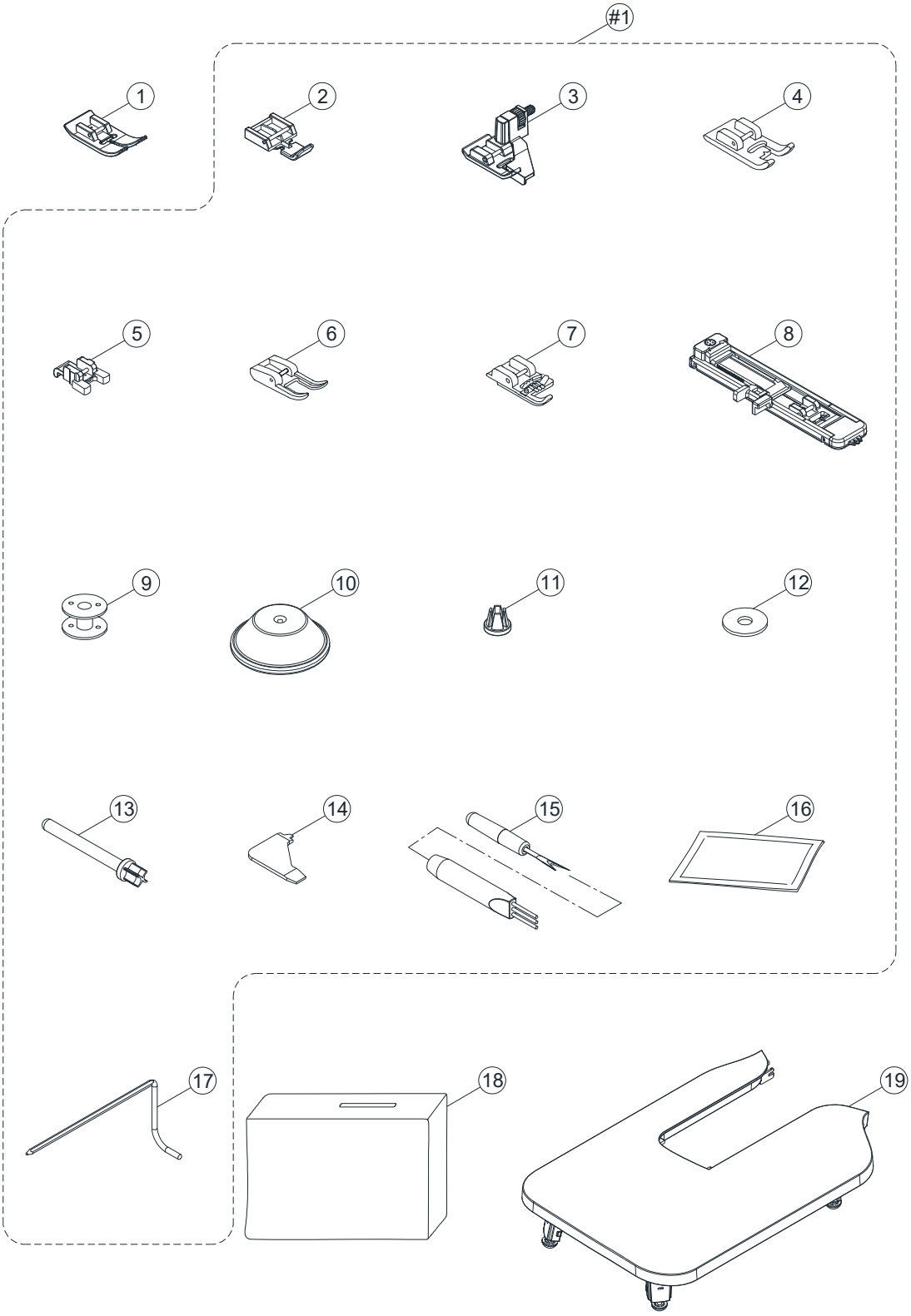

FOR C5950,C5955

Ref No	Part No	Part Name
#1	68024804	ACCESSORY CPL.
1	68017019	ALL PURPOSE FOOT
2	416128701	ZIPPER FOOT
3	416437101	BLIND HEMMING FOOT
4	416437201	FANCY STITCHES FOOT
5	416284501	BUTTON SEWING FOOT
6	416494101	OPEN TOE APPLIQUE FOOT
7	270 006813008	CORDING FOOT
8	68017017	BUTTONHOLE FOOT CPL.
9	68000175	BOBBIN
10	68003700	SPOOL HOLDER (LARGE)
11	68003701	SPOOL HOLDER (SMALL)
12	416127301	SPOOL PIN FELT
13	68003702	SPOOL PIN
14	68000177	L-SCREWDRIVER
15	416127701	BRUSH & SEAM RIPPER CPL.
16	250052602	NEEDLE
17	68017018	SEAM GUIDE / QUILTING BAR
18	68017069	SOFT COVER
19	68024801	EXTENSION TABLE CPL.